skydeck usa

PAVER on GRATE - PEDESTAL

SKYWALK PAVERS
Elevated Patio System by SKYDECK USA
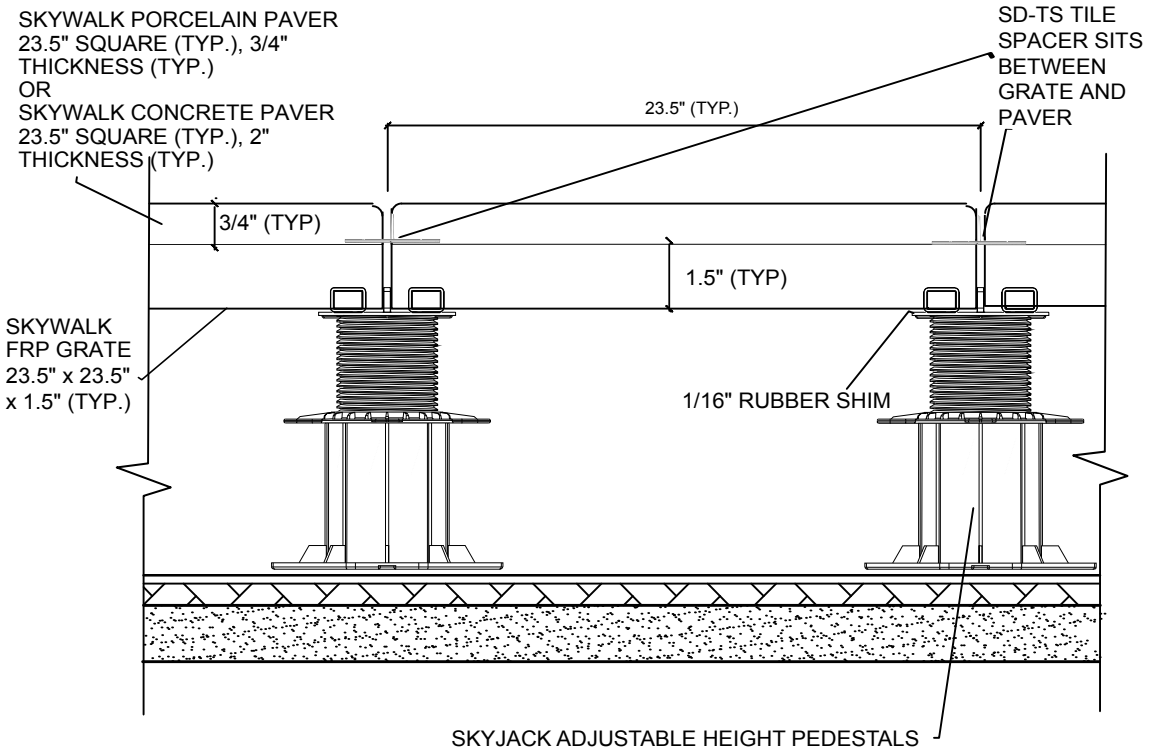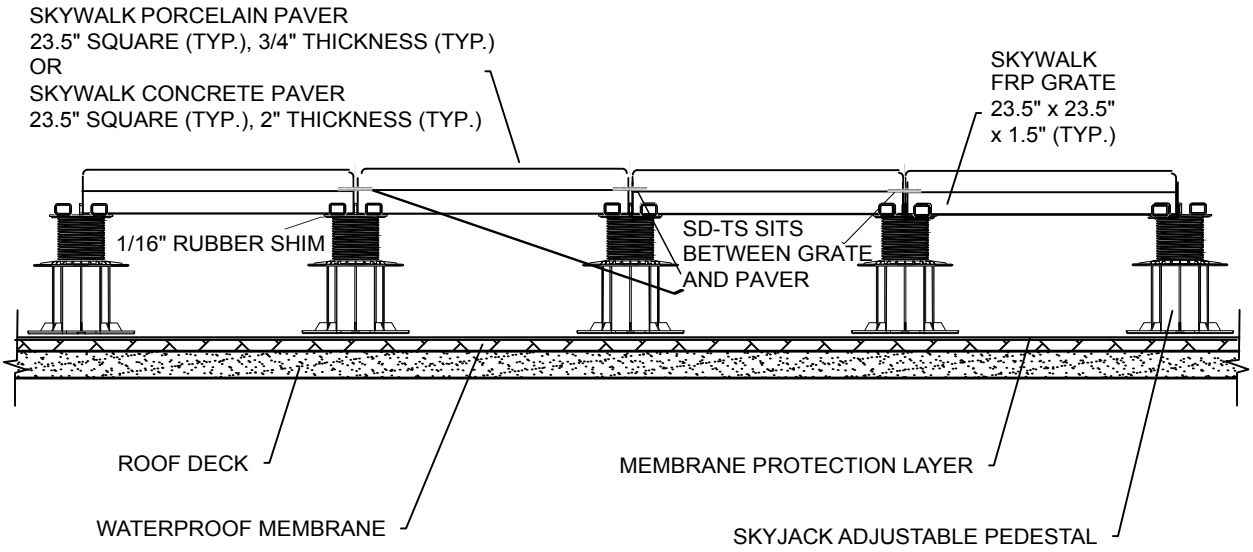
www.skydeckusa.com
INFO@skydeckusa.com